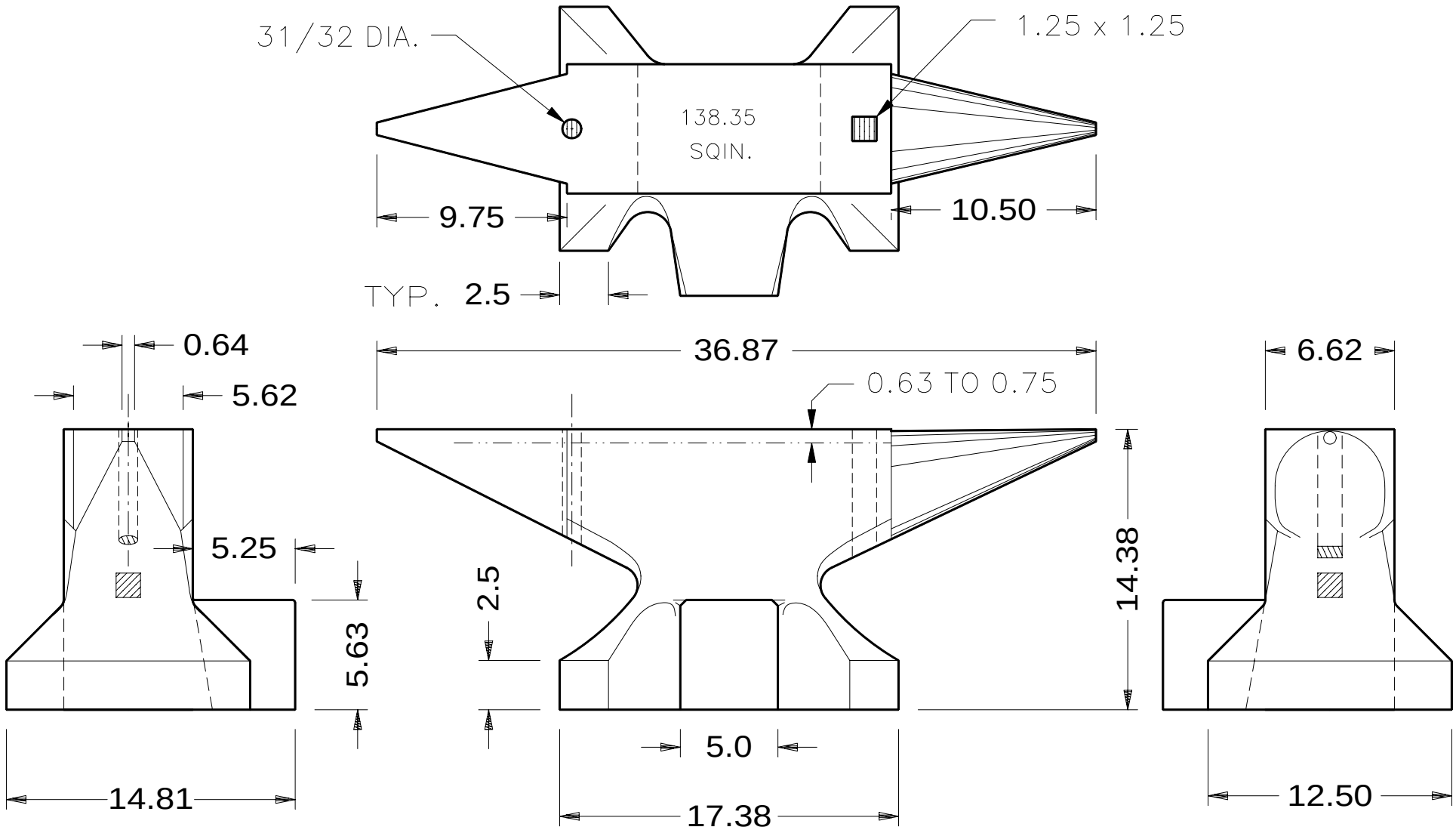

DOUBLE HORN ANVIL WITH UPSETTING BLOCK FROM GERMANY - 450 LBS.

WROUGHT BODY – STEEL FACE – NO MARKINGS – EXACT ORIGIN UNKNOWN

DIMENSIONS IN INCHES – DRAWN BY JOCK DEMPSEY 11/97